PLUME

MRDFUR0072V/ MRDFUR0072CR/ MRDFUR0072T

Assembly: No assembly required

Warranty: We offer a 2 year upholstered product against defects. This does not cover general wear and tear, or accidental breakage post-delivery. 5 years sofa wood frame.

Construction: Frame - combination of solid timber, metal and engineered timber.

Finishes:

Vanilla Boucle

Creme Boucle

Olive Boucle

Taupe Shearling

Seat Softness:

Soft — Firm

Specification:

Wood type:	Kiln dried wood
Surface cloth:	Boucle fabric
Seating:	High Density Foam core with soft fibre overlay
Backrest:	High Density Foam core with soft fibre overlay
Custom colors:	Available - 16wks
Custom Fabric:	Available - 16wks

Seat height:	Seat depth:	Arm height:
41 cm	66 cm	62 cm

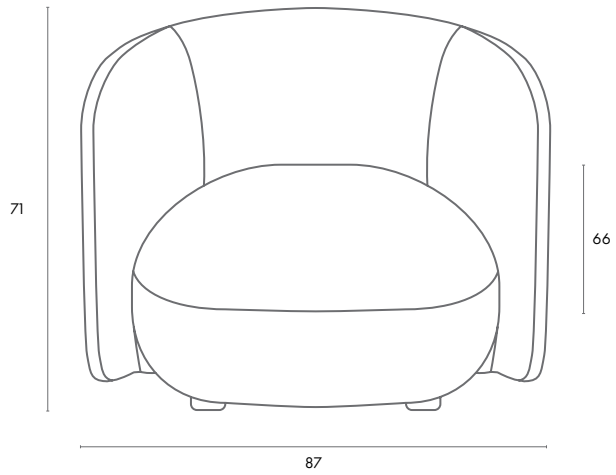

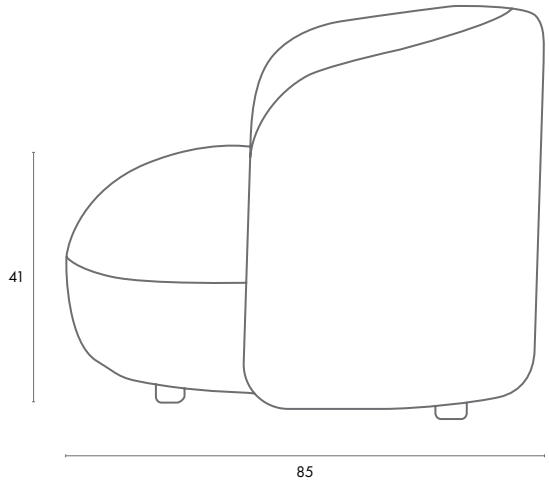

Armchair
87*85*71 cm

Packing method:
5 layer corrugated cardboard + woven bag
Package quantity: 1 pc per item

Packing size:	Weight:	CBM:
W88*D86*H73 cm	18 kg	0.550
Total weight & CBM:	**18 kg**	**0.550**